BOTTOM RAIL

0411-BOTTOM
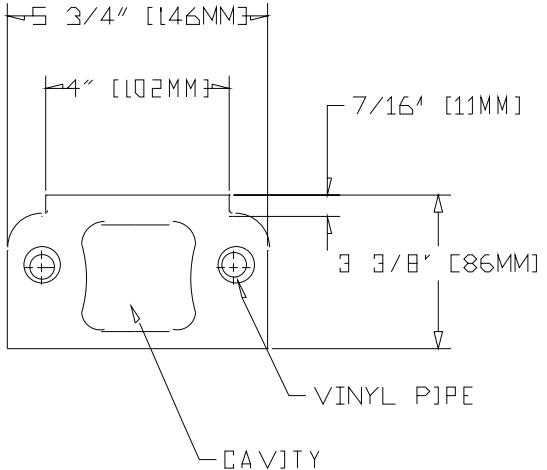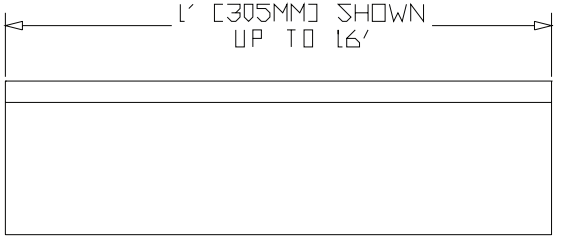
9 LBS/FT